Datasheet Superic

Industrial Switch

SP3006F | SP3010F | SP3018F

Overview

Wi-Tek Superic industrial unmanaged PoE switch provides 4/8/16 Gigabit Ethernet RJ-45 ports and 2 Gigabit SFP uplink ports. All RJ-45 ports comply with 802.3af/at PoE (PoE+) standard and output up to 30W PoE power per port. Professional design provides a flexible, easy-to-use, and reliable industrial network solution.

Redundant power design with polarity reverse/over-voltage/over-current protection guarantees a safe power supply. Solid shell, wide operation temperature from -40°C to 75°C, and high-level EMI/EMC capability design ensure its stable and reliable operation even in harsh environments. It is the best choice for outdoor CCTV projects, wireless coverage projects, and the project of industrial application scenarios such as factories and transportation.

Features

Full Gigabit Interfaces Design

SP3006F: 4×10/100/1000 Base-T PoE+ Ports and 2×1000 Base-X SFP ports
SP3010F: 8×10/100/1000 Base-T PoE+ Ports and 2×1000 Base-X SFP ports
SP3018F:16×10/100/1000 Base-T PoE+ Ports and 2×1000 Base-X SFP ports

High Level Protection Design

6kV surge immunity for power and Ethernet ports, 15kV air discharge and 8kV contact discharge ESD protection, makes it an ideal choice for outdoor application scenario.

Multiple Smart DIP Mode

1.VLAN Mode(SP3006F SP3010F):
All downlink ports are isolated from each other, but can communicate with uplink ports.
link aggregation(SP3018F):
Link aggregation is the combining of multiple uplink ports in parallel, in order to increase throughput beyond what a single connection could sustain, to provide redundancy in case one of the links should fail.
2.Extend Mode:
The transmission distance of port 1-2 (SP3006F) / 1-4 (SP3010F SP3018F) can be up to 250m, but the rate is limited to 10Mbps.
3.QoS Mode:
Port 1-2 (SP3006F SP3018F) / 1-4 (SP3010F) are on high data transmit priority.
4.PoE Watchdog Mode:
All PoE ports enable PoE watchdog, which can detect and reboot the offline compliant PoE powered devices.

Redundant DC Power Input Design

Support redundant 44-57V DC power input, provide reliable alternative power access solutions.

Specifications

Model	SP3006F	SP3010F	SP3018F
Hardware Features			
Interfaces			
Downlink Ports	4 x 10/100/1000Mbps RJ45 ports	8 x 10/100/1000Mbps RJ45 ports	16 x 10/100/1000Mbps RJ45 ports
Uplink Ports	2 × 1000Mbps SFP ports	2 × 1000Mbps SFP ports	2 × 1000Mbps SFP ports
PoE			
PoE Port	Port 1–4	Port 1–8	Port 1–16
PoE Standard	802.3af/at		
PoE Power Supply Type	End–span		
PoE Pin Assignment	1/2(+), 3/6(–)		
PoE Power	30 W max for each port, 120 W Max. (PoE power budget)	30 W max for each port, 240 W Max. (PoE power budget)	30 W max for each port, 240 W Max. (PoE power budget)
Switch Property			
Standards and Protocols	IEEE 802.3 10Base–T Ethernet IEEE 802.3u Fast Ethernet IEEE 802.3ab Gigabit Ethernet IEEE 802.3x Full–Duplex Flow Control IEEE 802.3az Energy Efficient Ethernet IEEE 802.3af Power–Over–Ethernet IEEE 802.3at Power Over Ethernet Plus PSE		
Forwarding Mode	Store and Forward		
Switching Capacity	12 Gbps	20 Gbps	36 Gbps
Packet Forwarding Rate	8.9 Mpps	14.9 Mpps	26.8 Mpps
MAC Address Table	16 k		
Packet Buffer Memory	2 Mbit		
Jumbo Frame	10 kB		
Power Supply			
Input Power	Power 1 (Main): 44–57V DC, Power 2 (Backup): 44–57V DC		
Power Consumption	Idle: 6 W	Idle: 10 W	Idle:10 W

Model	SP3006F	SP3010F	SP3018F
Physical Characteristics			
LED Indicators	P Off: the device is power off or failed Green On: the device power on is normal S Off: total PoE usage < 50% Red blinking: 50% < total PoE usage < 90% Red on: total PoE usage ⩾ 90% Link Off: ports link down On: ports link up Blinking: data on TX/RX PoE Off: PoE not working On: PoE working 5, 6(Fiber ports indicators) Off: ports link down Green On: ports link up Green Blinking: data on TX/RX	P Off: the device is power off or failed Green On: the device power on is normal S Off: total PoE usage < 50% Red blinking: 50% < total PoE usage < 90% Red on: total PoE usage ⩾ 90% Link Off: ports link down On: ports link up Blinking: data on TX/RX PoE Off: PoE not working On: PoE working 9, 10(Fiber ports indicators) Off: ports link down Green On: ports link up Green Blinking: data on TX/RX	P Off: the device is power off or failed Green On: the device power on is normal S Off: total PoE usage < 50% Red blinking: 50% < total PoE usage < 90% Red on: total PoE usage ⩾ 90% Link Off: ports link down On: ports link up Blinking: data on TX/RX PoE Off: PoE not working On: PoE working 17, 18(Fiber ports indicators) Off: ports link down Green On: ports link up Green Blinking: data on TX/RX
LED Indicators			
Fan Quantity	Fanless		
Switch Dimensions	145*105*57mm		176*123*57mm
Package Dimensions	187*151*72 mm		238*185*72 mm
Weight	Net Weight: 0.88 kg	Net Weight: 0.90 kg	Net Weight: 1.28 kg
	Package Weight: 1.00 kg	Package Weight: 1.01 kg	Package Weight: 1.44 kg
Installation	Desktop, DIN-rail		

Model	SP3006F	SP3010F	SP3018F
Environmental			
Surge Immunity of Ethernet ports	IEC 61000-4-5 Common mode 6kV Differential mode 2kV		
Surge Immunity of power	IEC 61000-4-5 Common mode 6kV Differential mode 4kV		
ESD Protection	IEC 61000-4-2 Contact discharge 8kV Air discharge 15kV		
Operating Temperature	-40℃ ~ 75℃(-40°F to 167°F)		
Storage Temperature	-40℃ ~ 85℃(-40°F to 185°F)		
Operating Humidity	5% ~ 95%(Non-condensation)		
Certification			
Certification	CE, FCC, RoHS, UKCA, RCM		

Appearances and Dimensions

SP3006F

Dimensions (mm)

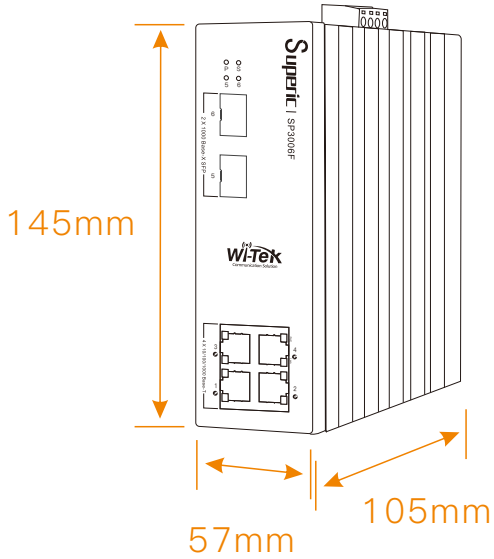

Front Panel

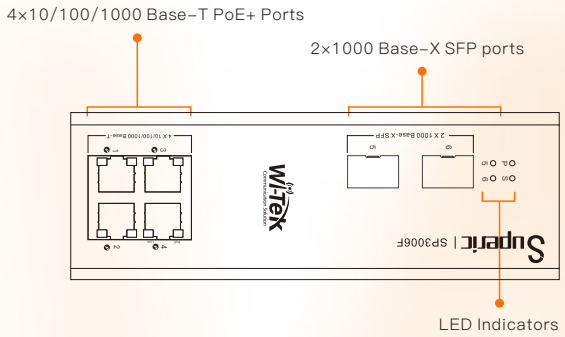

Side Panel

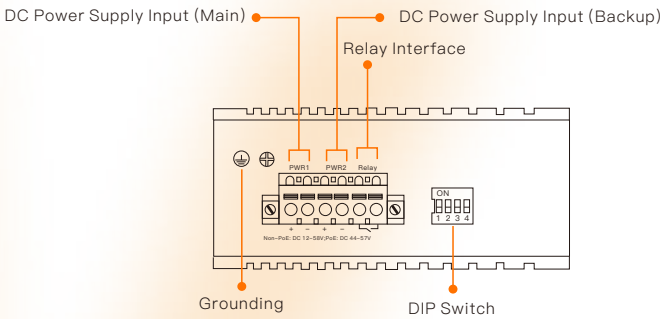

SP3010F

Dimensions (mm)

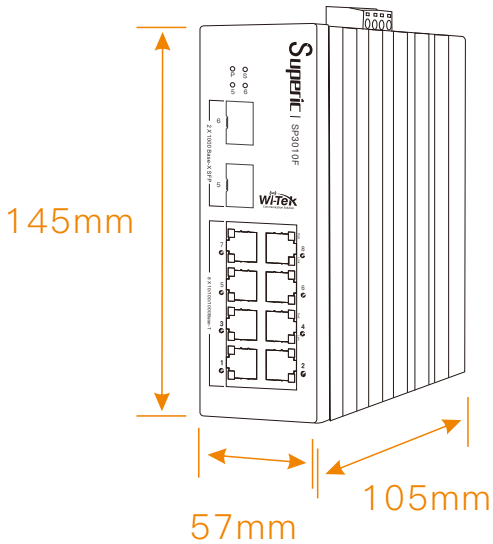

Front Panel

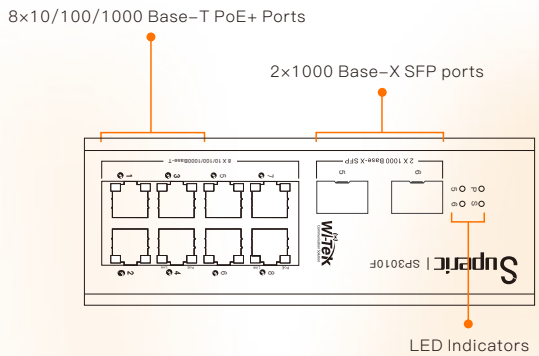

Side Panel

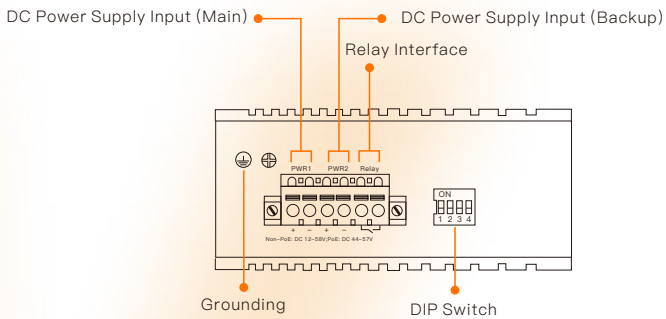

SP3018F

Dimensions (mm)

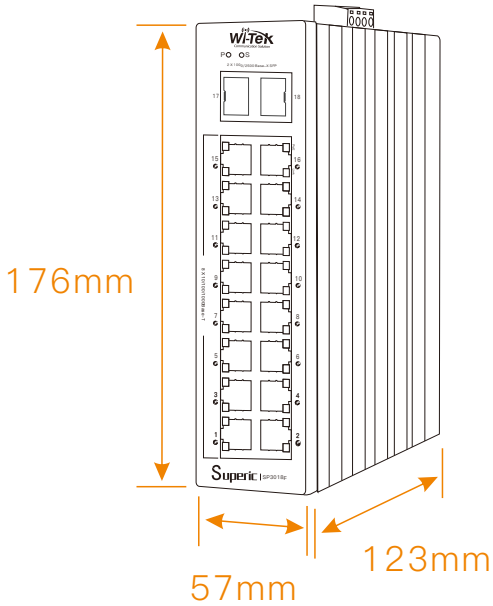

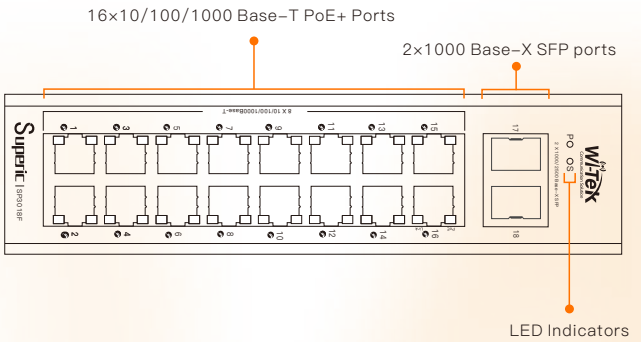

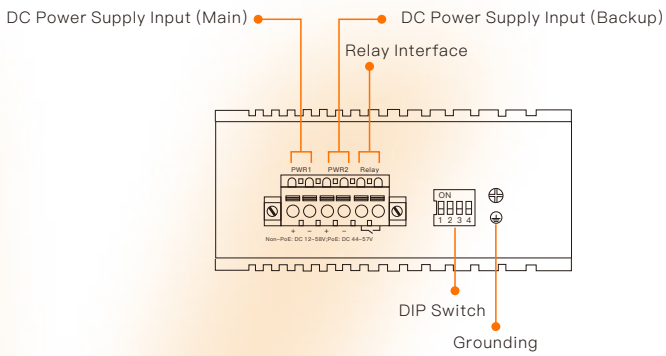

Package Contents

Welcome to order our products. After purchasing, you will receive:

Items	Quantity
Switch	1 pcs
Quick Installation Guide	1 pcs

Wireless-Tek Technology Limited
Address: Biaofan Technology Building 402, Bao'an street, Baoan District, Shenzhen City, Guangdong, China
Website: www.wireless-tek.com
Tel: 86-0755-32811290
Email: sales@wireless-tek.com
Technical Support: tech@wireless-tek.com

Technical Support

Cloud Management

Company Website

©2023 Wireless-tek Technology Limited. All Rights Reserved.
Version, V3.0, updated 2023-10-31.
The information in this document is subject to change without notice.
Every effort has been made in the preparation of this document to ensure accuracy of the contents, but all statements, information, and recommendations in this document do not constitute a warranty of any kind, express or implied.