Datasheet

Smart IoT Box

WI-IOTBOXMINI | WI-IOTBOX01 | WI-IOTBOX02 | WI-IOTBOX03

New Upgrade: Added microswitch accessories!

More secure lock cartridge and key!

Suitable for waterproof connectors of Ethernet cables!

Additional bottom holes are available for airduct!

Overview

Wi-Tek's Smart IoT Box is an all-weather outdoor electrical equipment protection box designed for outdoor use in the outdoor environment. It has waterproof, dustproof, heat dissipation, anti-ultraviolet, anti-theft, anti-rust, acid and alkali corrosion, anti-electromagnetic interference (anti-lightning EMP), modular structure design in the box, electrical equipment can be installed vertically or horizontally according to the situation.

Fit outdoor CCTV, WLAN, Wi-Fi Coverage, Industrial IoT Application requirements with Wi-Tek industrial switch, 4G LTE router, outdoor wireless transmitter, solar powered PoE switch, IoT M2M gateway, and mesh AP, greatly decrease your project deployment cost by flexible modular installation.

Features

IP65 Ingress Protection

Outstanding dustproof and waterproof design protects the equipment inside the box in the outdoor.

Rugged construction, IK10 Inverse Kinematics

A seamless welding box body can withstand huge external forces without deformation.

Advanced Outdoor Protection

Made of aluminum alloy or 304 stainless steel connecting mounting parts, Electrostatic powder spraying main body, can anti-aging, gas corrosion resistance, UV damage resistance, acid and alkali corrosion resistance, salt spray moisture resistance.

Modular Installation

The modular structure design, top cover, side panel, DIN-rail, mounting plate, waterproof connector, fan, and microswitch are all detachable.

Heat Dissipation

The fan on the top and the cable and ventilation holes on the bottom form a bottom-up air duct to help heat dissipation.

Microswitch for Flexible Application

The door microswitch can be connected to the power supply, to the cloud alarm via I/O, or to the buzzer alarm.

Specifications

Products	WI-IOTBOXMINI
Hardware Version	V1
Hardware Features	
Overall Dimensions (W*H*D)	300*300*206.5mm
Inner Dimensions (W*H*D)	250*250*180mm
Weight(kg)	5.5
Package Dimensions (W*H*D)	360*360*230mm
Package Weight(kg)	7.7
Thickness	1.2mm
Material	SUS430 Stainless Steel
Color	Light Grey + Grey
Surface Treatment	Electrostatic Spraying
Installation	Pole/Wall/Floor mounted
Door	1
Lock Hole	1
Detachable Side Plate	2 (1 on each side panel)
M25 Waterproof Connector	2 (1 on each side inner panel)
Aluminum Alloy Chute	2 (on the rear panel)
Bottom Cable Entry	1 (at the bottom)
Air Intake Holes/ Water Outlet Holes	4 (at the bottom, with rubber plugs)
Microswitch	1 (on the upper right inside)
Fan	1 (on the top inner panel)
Protection	IP65, IK10
Application	
Application	Junction, Distribution, Electrical, Battery, Control, Monitoring etc. Outdoor waterproof Enclosure Box

Specifications

Products	WI-IOTBOX01	WI-IOTBOX02	WI-IOTBOX03
Hardware Version	V2	V2	V2
Hardware Features			
Overall Dimensions (W*H*D)	300*400*206.5mm	400*600*256.5mm	500*720*286.5mm
Inner Dimensions (W*H*D)	250*350*180mm	350*560*230mm	450*650*260mm
Weight(kg)	7.2	12.6	17.1
Package Dimensions (W*H*D)	360*460*230mm	460*670*290mm	560*760*330cm
Package Weight(kg)	9.4	15.1	21.2
Thickness	1.2mm		
Material	SUS430 Stainless Steel		
Color	Light Grey + Grey		
Surface Treatment	Electrostatic Spraying		
Installation	Pole/Wall/Floor mounted		
Door	1		
Lock Hole	1	1	2
Detachable Side Plate	4 (2 on each side panel)		
M25 Waterproof Connector	4 (2 on each side inner panel)		
Aluminum Alloy Chute	2 (on the rear panel)		
Bottom Cable Entry	1 (at the bottom)		
Air Intake Holes/ Water Outlet Holes	4 (at the bottom, with rubber plugs)		
Microswitch	1 (on the upper right inside)		
Fan	1 (on the top inner panel)		
Protection	IP65, IK10		
Application			
Application	Junction, Distribution, Electrical, Battery, Control, Monitoring etc. Outdoor waterproof Enclosure Box		

Accessory Specifications

Products	
Fan	
Input Voltage	12V DC (7~13.2V DC)
Input Current	0.24A
Power consumption	<3.36W
Speed	3800 R.P.M ± 10%
Air Flow	112.77 m3/h @Zero Static Pressure
Acoustical Noise	43dB-A (MAX. 46dB-A)
Dimensions	92*92*25.4mm ±0.5mm
Operation temperature	-10°C ~70°C
Miniature Circuit Breaker	
Model	CHNT NXB-63
Number of Poles	2P
Rated Current	63A
Rated Voltage	400V~
Thermal Magnetic Release	C
Mechanical Life	20,000 cycles
Electrical Life	10,000 cycles
Short-circuit Breaking Capacity (Icn)	6000A
Dimensions (W*H*D)	36*81*77.8mm
Installation	DIN-rail mounted
Microswitch	
Model	Omron V156-1C25
PIN	NC, NO, COM; NC and COM have connected cables.
Rated Current	15A
Rated Voltage	250V
Mechanical Life	15,000,000 cycles
Thermostat (optional)	
Function	Red Thermostat: normally close, disconnect the circuit when the set temperature is reached, usually used for heating. Blue Thermostat: normally open, connect the circuit when the set temperature is reached, usually used for fans.
Setting Temperature Range	0~60°C
Switch Temperature Difference	7K (±4K tolerance)
Service Life	100000 cycles
Max capacity	250V AC, 10(2)A; 120V AC, 15(2)A; DC 30W
Connection	2-pole, 2.5mm^2 max. wire
Dimensions (W*H*D)	36*81*77.8mm
Weight	40g
Installation	DIN-rail mounted
Operation Temperature	-20°C ~80°C

Products	
Heater (Optional)	
Heater Capacity	45W
Input Voltage	120V~240V AC/DC (110V min. 265V max.) *The heating performance will be reduced by 10% when operating voltage is lower than 140V.
Input Current	3.5A max
Heating Element	PTC resistor
Material	Aluminum
Connector	3*press clamps, fit 0.5~1.5mm^2 standard wire and 0.5~2.5mm^2 rigid wire
Dimensions	70*110*60mm
Weight	0.3kg
Installation	DIN-rail mounted
Operation temperature	-45°C ~70°C

Appearances and Dimensions

WI-IOTBOXMINI

Front Overview

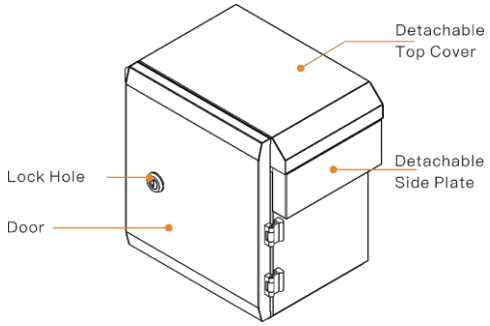

Rear Overview

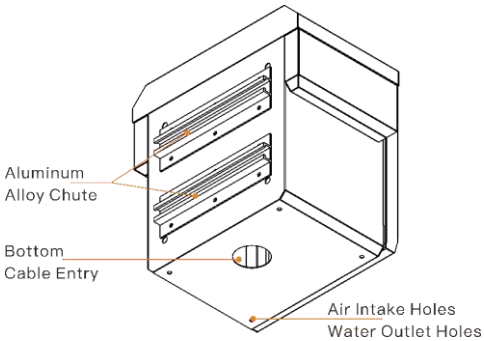

Inner Overview

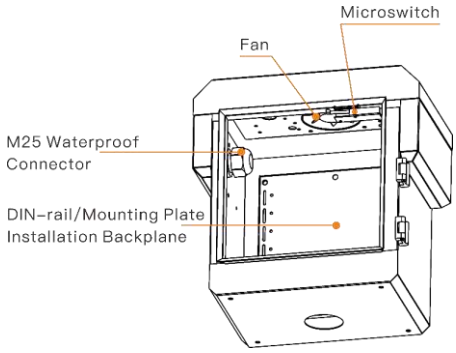

Front

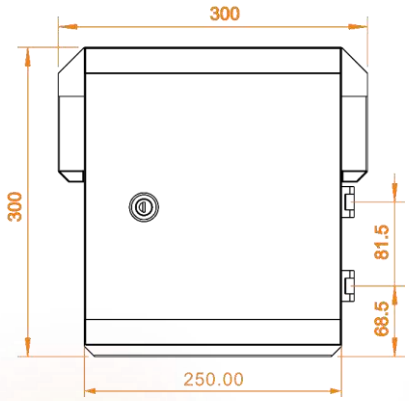

Inner Front

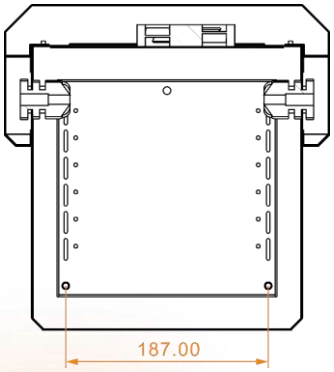

Rear

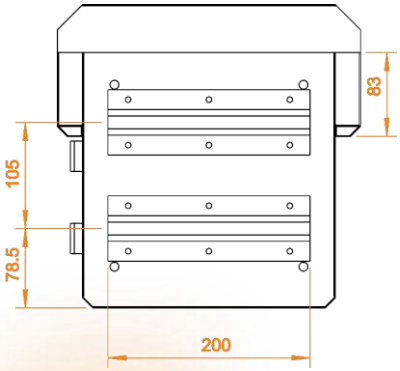

Left Side

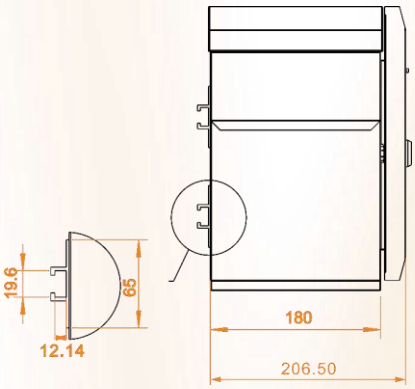

Right Side

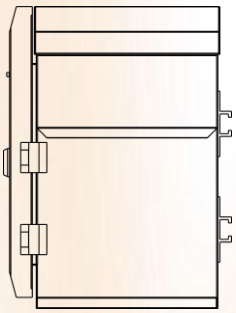

Inner Side

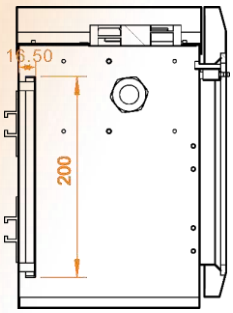

Bottom

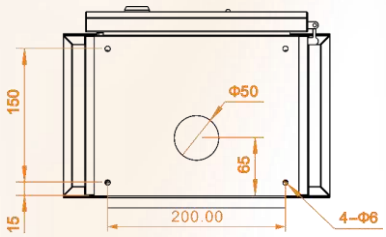

Inner Top

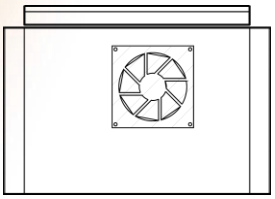

WI-IOTBOX01

Front Overview

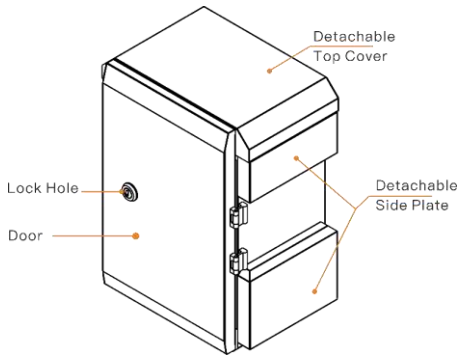

Rear Overview

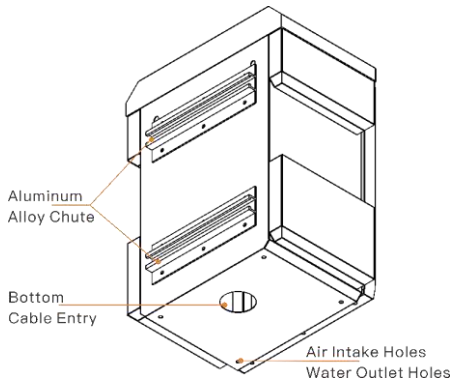

Inner Overview

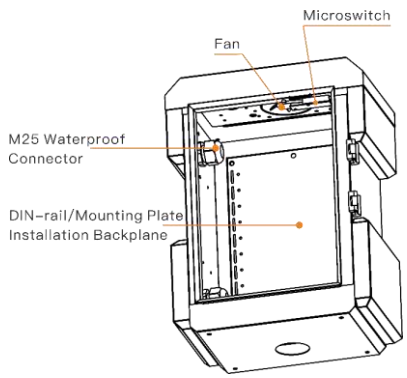

Front

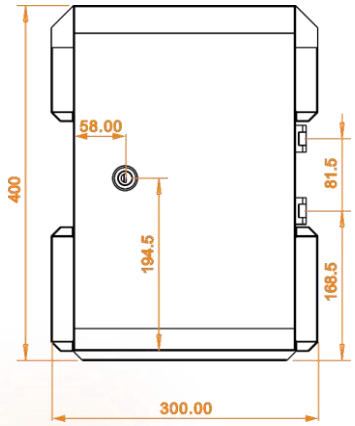

Inner Front

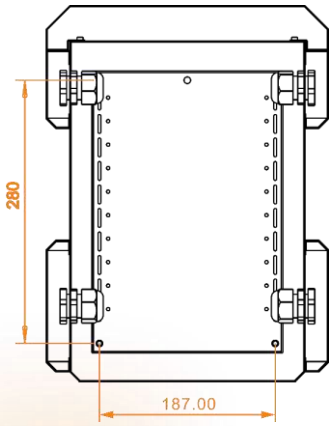

Rear

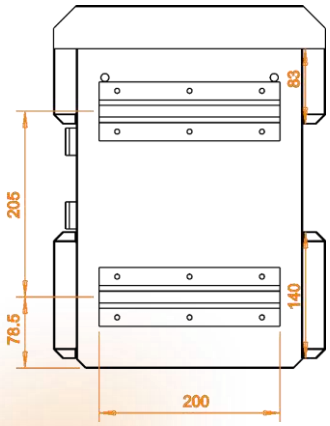

Left Side

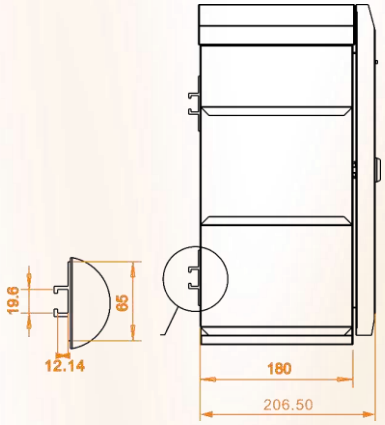

Right Side

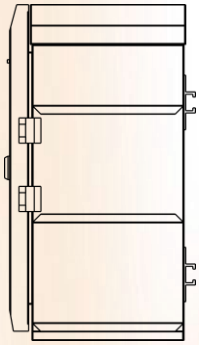

Inner Side

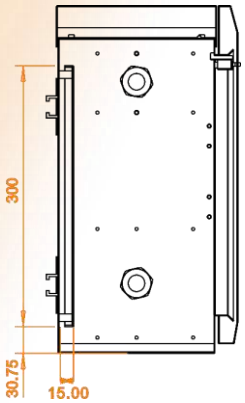

Bottom

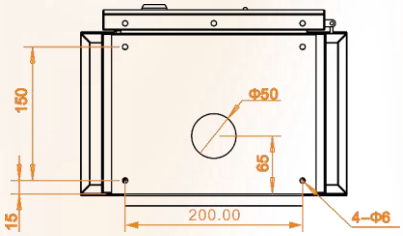

Inner Top

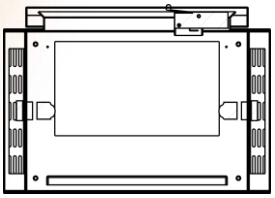

WI-IOTBOX02

Front Overview

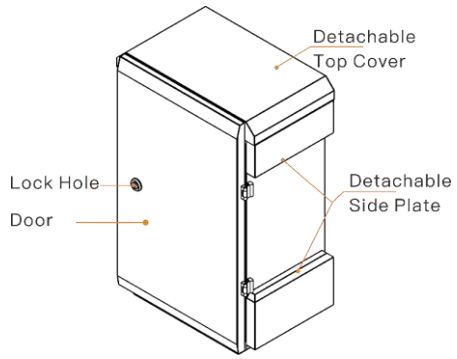

Rear Overview

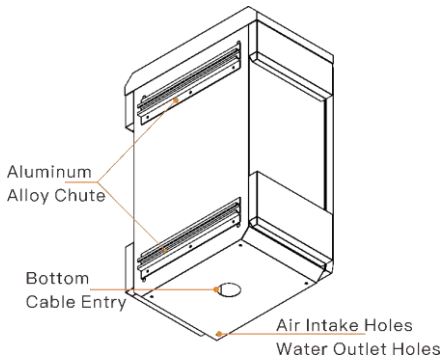

Inner Overview

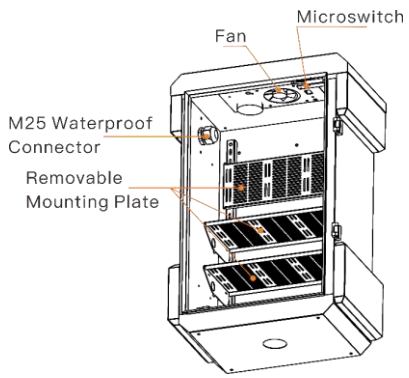

Front

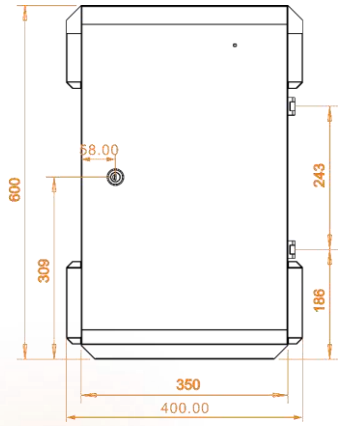

Inner Front

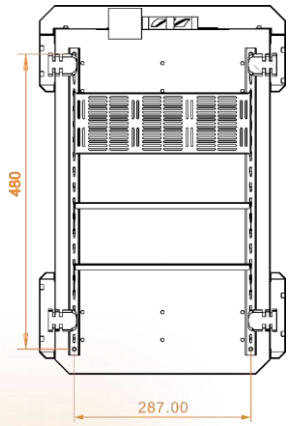

Rear

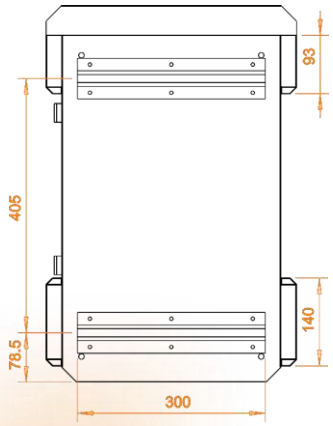

Left Side

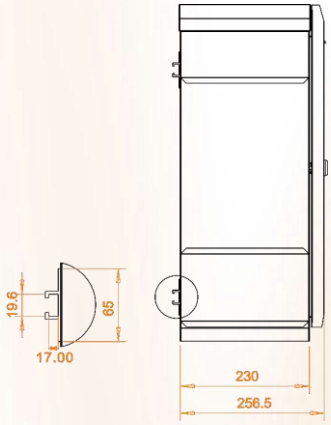

Right Side

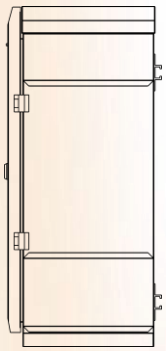

Inner Side

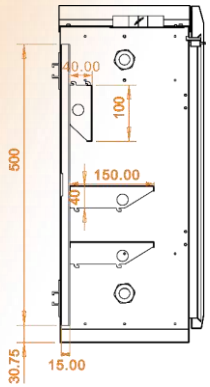

Bottom

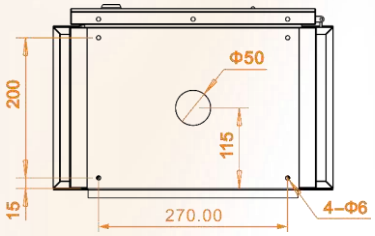

Inner Top

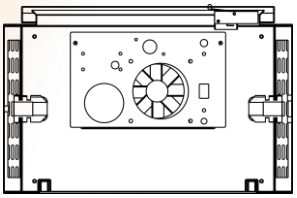

WI-IOTBOX03

Front Overview

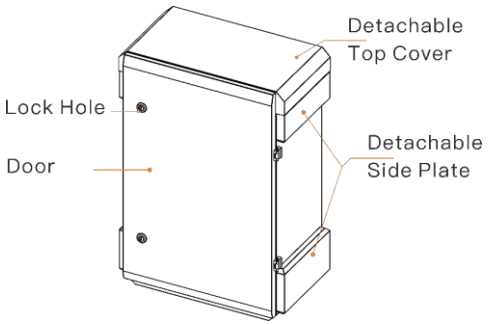

Rear Overview

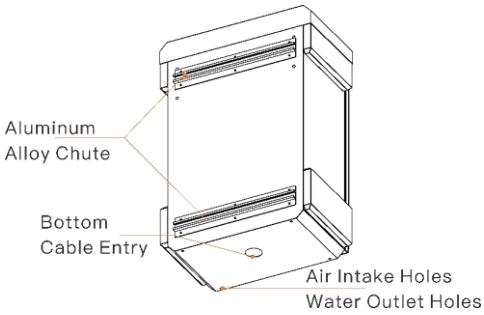

Inner Overview

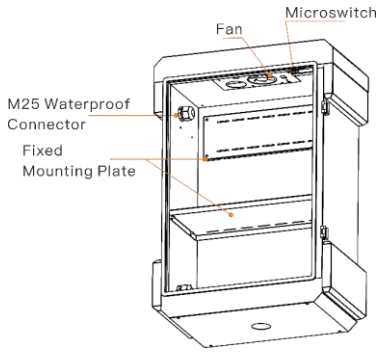

Front

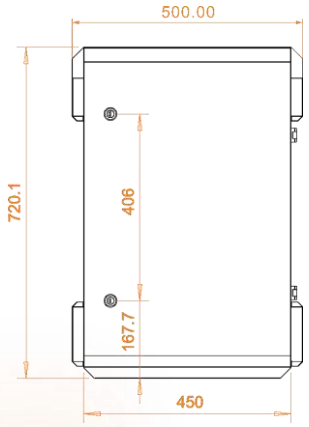

Inner Front

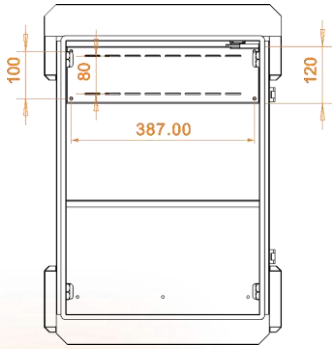

Rear

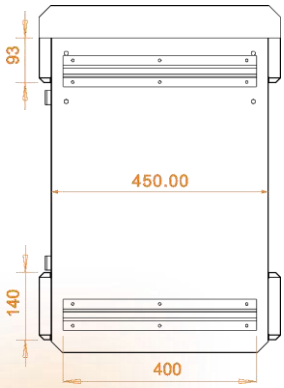

Left Side

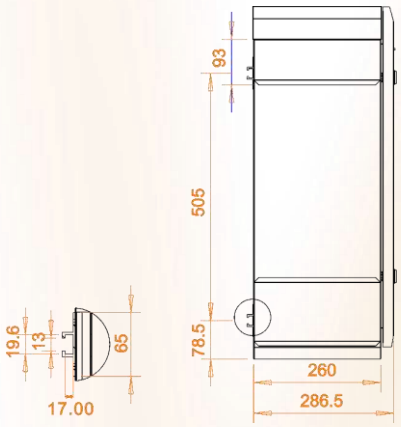

Right Side

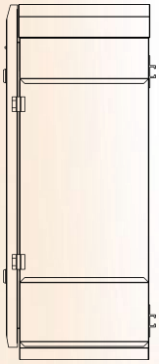

Inner Side

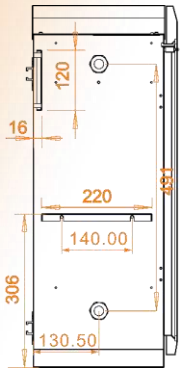

Bottom

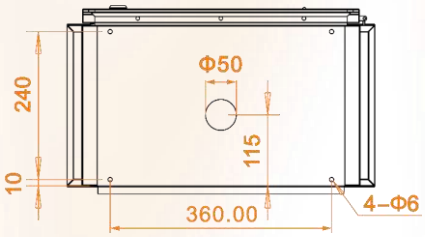

Inner Top

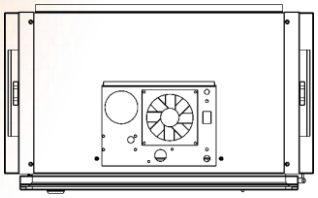

Package Content

Welcome to order our products. After purchasing, you will receive:

Item	WI-IOTBOXMINI	WI-IOTBOX01	WI-IOTBOX02	WI-IOTBOX03
BOX	1 pc			
Quick Installation Guide	1 pcs			
Waterproof Connector	2 pcs	4 pcs	4 pcs	4 pcs
Key	2 pcs			
Microswitch	1 pcs			
Miniature Circuit Breaker	1 pcs			
Grounding Connector	1 pcs			
DIN-rail	1 pcs	2 pcs	2 pcs	2 pcs
Wall Mounting Accessories	2*Hanging Pieces (Small), 2*Hanging Pieces (Large), 4*Expansion screws, 4*Hex screws			
Pole Mounting Accessories	2*1.2m Stainless Steel Cable Ties (50-350mm in diameter), 2*Stainless Steel Universal Clips			
Mounting Plate	N/A	N/A	3 pcs (Removable)	2 pcs (Fixed)
Option Accessory				
Thermostat	Switches of fans or other devices according to the temperature.			
Heater	Heat the inside of the BOX to keep the device working at a proper temperature and humidity.			
Mounting Plate (For WI-IOTBOX01)	Installed inside the box for placing devices. Dimensions(W*H*D): 188.5*40*100mm			

Wireless-Tek Technology Limited
Address: Building 3, Units 1801-1807, 1812, Huaqiang Era Plaza, Tangwei Community, Fuhai Street, Bao'an District, Shenzhen City, Guangdong Province, China.
Website: www.wireless-tek.com
Tel: 86-0755-32811290
Email: sales@wireless-tek.com
Technical Support: tech@wireless-tek.com

Technical Support
Cloud Management
Company Website

©2024 Wireless-tek Technology Limited. All Rights Reserved.
Version, V1.1, updated 2024-06-05.
The information in this document is subject to change without notice.
Every effort has been made in the preparation of this document to ensure accuracy of the contents, but all statements, information, and recommendations in this document do not constitute a warranty of any kind, express or implied.