Datasheet

Cloud Easy Smart 250m PoE Switch

WI-PCES206 | WI-PCES210G | WI-PCES218GF | WI-PCES226GF

Overview

Wi-Tek Cloud Easy Smart 250m PoE Switch provides 4/8/16/24 100Mbps PoE ports, some PoE ports can reach up to 90W output, suitable for powering high-power PD, which can fulfill the demand for sufficient PoE power for HD IP surveillance. It offers an easy-to-use, reliable, intelligent power solution for CCTV networks.

This series of switches supports cloud management where you can remotely manage your devices in the cloud platform/mobile app, providing you with intelligent, simple, and easy-to-maintain management measures. Users can view the network status, modify the configuration, and troubleshoot at home anytime.

Features

Wi-Tek Cloud Easy Smart Management

ONVIF cameras and Wi-Tek cloud management devices can be remotely managed through the Wi-Tek cloud platform/mobile APP, making CCTV network projects truly intelligent and easy to maintain. You can easily access and manage your cameras through your phone or computer anytime, anywhere.

(Note: The Eweb channel can be created only when the easy smart switch is linked with the other type of Wi-Tek cloud management device, such as cloud L2, L3 management switch, gateway, wireless AP, etc.)

Remote Configuration

There is no need to go to the site to configure it. Users can make remote configurations such as port restart, PoE restart, and VLAN division; even maintenance and debugging can be done remotely anytime and anywhere.

Support ONVIF Detect

Automatically detect the ONVIF cameras on the same network subnet.

Independent Intelligent DIP, Easy to Switch Functional Modes

DIP switch provides Extend mode(250m Long Range), VLAN mode and PD Alive mode. No configuration is needed, quick provision and more flexible project adaptation.

Specifications

Model	WI-PCES206	WI-PCES210G	WI-PCES218GF	WI-PCES226GF
Hardware Version	V1	V1	V1	V1
Hardware Features				
Interfaces				
Downlink Port	4*10/100Mbps RJ45 PoE Ports	8*10/100Mbps RJ45 PoE Ports	16*10/100Mbps RJ45 PoE Ports	24*10/100Mbps RJ45 PoE Ports
Uplink Port	2*10/100Mbps Ethernet Ports	2*10/100/1000Mbps Ethernet Ports	2*1000Mbps Combo SFP	2*1000Mbps Combo SFP
PoE				
PoE Port	Port 1-4	Port 1-8	Port 1-16	Port 1-24
PoE Standard	Port 1-2: Hi-PoE 45W Port 3-4: 802.3af/at 30W	Port 1-2: Hi-PoE 45W Port 3-8: 802.3af/at 30W	Port 1-4: 802.3bt 90W Port 5-16: 802.3af/at 30W	Port 1-4: 802.3bt 90W Port 5-24: 802.3af/at 30W
PoE Pin Assignment	1/2(+), 3/6(-)		Port 1-4: 1/2(+), 3/6(-), 4/5(-), 7/8(+) Port 5-16: 1/2(+), 3/6(-)	Port 1-4: 1/2(+), 3/6(-), 4/5(-), 7/8(+) Port 5-24: 1/2(+), 3/6(-)
POE Power Budget	60W	100W	250W	280W
Performance				
Flash	16MB			
Switch Property				
Standards and Protocols	IEEE 802.3 (Ethernet) IEEE 802.3u (Fast Ethernet) IEEE 802.3ab (Gigabit Ethernet) IEEE 802.3af (Power over Ethernet) IEEE 802.3at (Power over Ethernet Plus)			
Forwarding Mode	Store and Forward			
Switching Capacity	1.2Gbps	5.6Gbps	7.2Gbps	8.8Gbps
Packet Forwarding Rate	0.89Mpps	4.17Mpps	5.36Mpps	6.56Mpps

Model	WI-PCES206	WI-PCES210G	WI-PCES218GF	WI-PCES226GF
MAC Address Table	8k	4k	8k	8k
Packet Buffer Memory	4Mbit			
Jumbo Frame	9216Byte			
Power Supply				
Input Power	100-240V AC 50/60Hz			
Power Consumption	Idle: 2.7 W 100% Traffic Rate with PoE: 62.7 W	Idle: 2.4 W 100% Traffic Rate with PoE: 102.4W	Idle: 3.7 W 100% Traffic Rate with PoE: 253.7 W	Idle: 5.1 W 100% Traffic Rate with PoE: 285 W
Physical Characteristics				
LED Indicators	**PWR(Green)** On: the device power on is normal Off: the device is power off or failed **PoE(Orange)** On: There is a PoE PD connected to be port, which supply power successfully Off: No PoE powered device (PD) connected **Link(Orange)** On: Port connected Off: Port disconnected Blinking: Data transmission			**PWR(Green)** On: the device power on is normal Off: the device is power off or failed **Link(Grenn)** On: Port connected Off: Port disconnected Blinking: Data transmission **PoE(Orange)** On: There is a PoE PD connected to be port, which supply power successfully Off: No PoE powered device (PD) connected **PoE Max(Green)** When total PoE output power > Power Budget * 80%, the LED light will be on
Buttons				
DIP Switch	1. Extend The transmission distance of PoE Port can be up to 250m with 10Mbps 2. VLAN Enable Port isolation, each PoE port just can send data to uplink port 3. PD Alive All PoE ports enable PoE Alive function, which can detect and reboot the offline compliant PoE powered devices			

Model		WI-PCES206	WI-PCES210G	WI-PCES218GF	WI-PCES226GF
Reset		Hold for >5 sec. to restore factory configuration			
Fan Quantity		Fanless	1	1	2
Switch Dimensions		169×95×32 mm	169×95×32 mm	220.0×150.0×44 mm	440*207*44mm
Package Dimensions		193.0×203.0×62.0 mm	195.0×201.0×62.0 mm	315.0×202.0×82.0 mm	
Weight		Net Weight: 0.48 kg	Net Weight: 0.48 kg	Net Weight: 1.81 kg	Net Weight: 2.74 kg
		Package Weight: 0.821kg	Package Weight: 0.78kg	Package Weight: 2.44 kg	Package Weight: 3.39 kg
Installation		Wall-mounted/ Desktop		Desktop/ Rack-mount	
Environmental					
Reliability	Surge Immunity	IEC 61000-4-5 Common mode 4kV Differential mode 2kV			
	ESD Protection	IEC 61000-4-2 Contact discharge 6kV Air discharge 8kV			
Operating Environment		-10℃-50℃ (14°F-122°F); 10-90% RH non-condensing			
Storage Environment		-40℃-70℃ (-40°F-158°F); 5—90% RH non-condensing			
Certification					
Certification		CE, FCC, RoHS, UKCA, RCM			

Model	WI-PCES206	WI-PCES210G	WI-PCES218GF	WI-PCES226GF
Software Features				
System Settings	IP Settings			
	User Management			
	Firmware Upgrade			
	Reset			
	Reboot			
Monitoring	Port Statistics			
	Cable Diagnostics			
Switch Settings	Port Mirroring			
	Port Isolation			
	Port Reboot			
	Jumbo Frame			
	MAC Search			
	Static MAC			
	MAC List			
	Storm Control			
	Bandwidth Control			

Model	WI-PCES206	WI-PCES210G	WI-PCES218GF	WI-PCES226GF
VLAN Settings	Port-based VLAN			
	VLAN Range: 1-4094			
PoE Settings	PoE port disable			
	PD Alive			
	Extend PoE			
ONVIF	Automatically identify IP cameras that support ONVIF			
Wi-Tek Cloud manage	Cloud management and APP management			

WI-PCES206

Dimensions (mm)

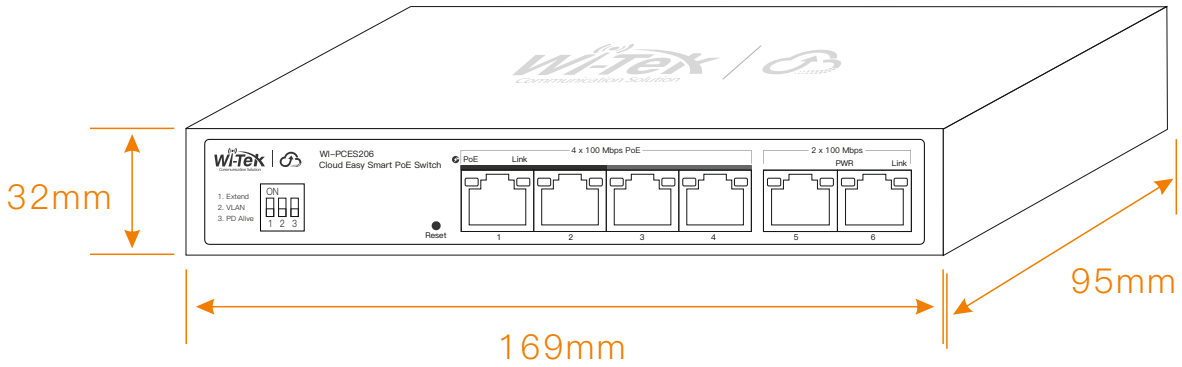

Front Panel

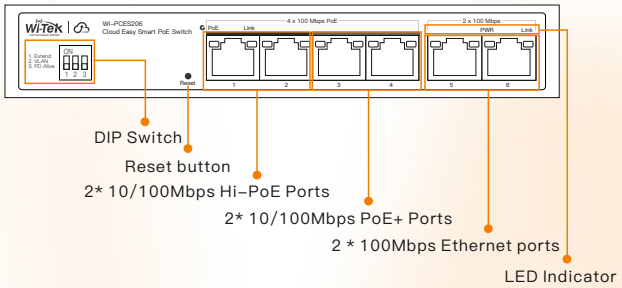

Side Panel

WI-PCES210G

Dimensions (mm)

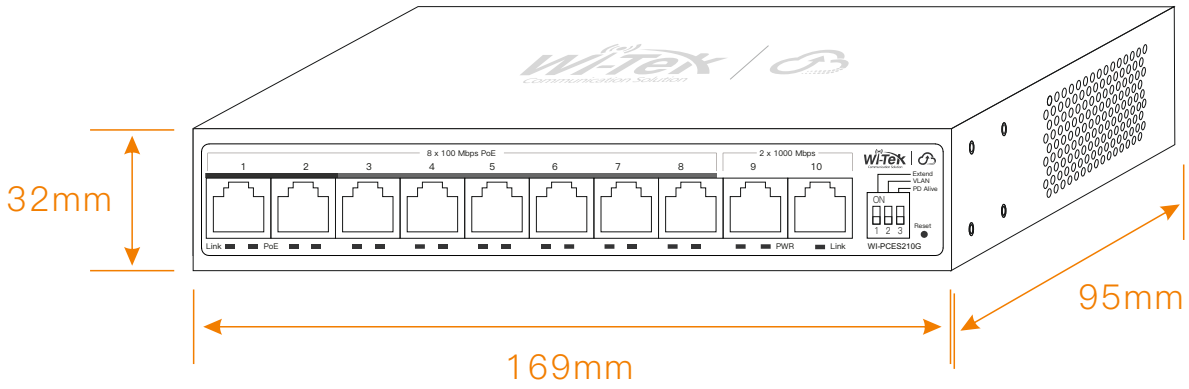

Front Panel

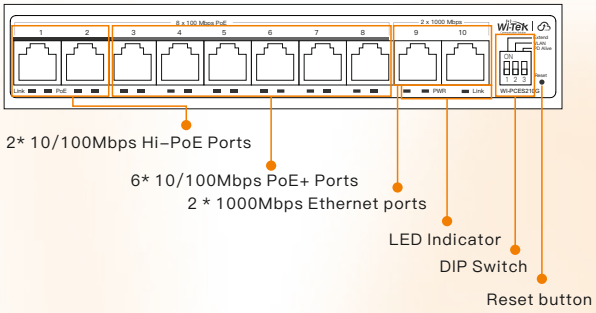

Side Panel

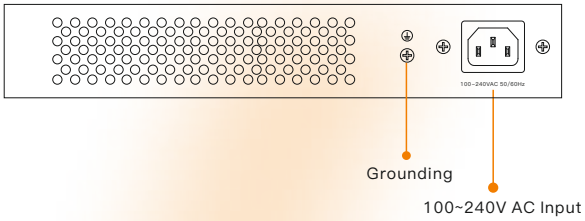

WI-PCES218GF

Dimensions (mm)

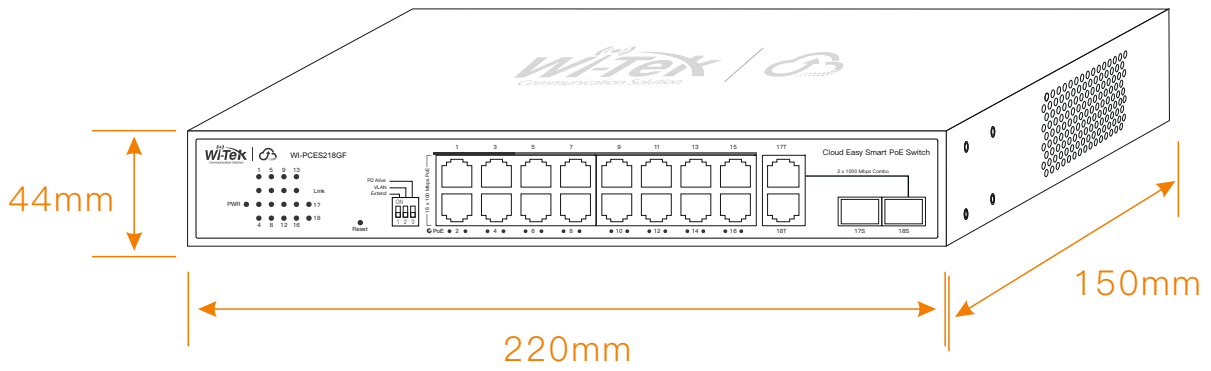

Front Panel

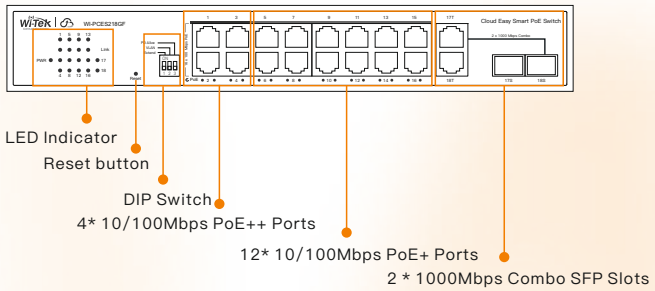

Side Panel

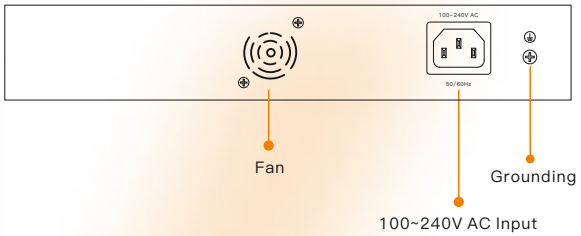

WI-PCES226GF

Dimensions (mm)

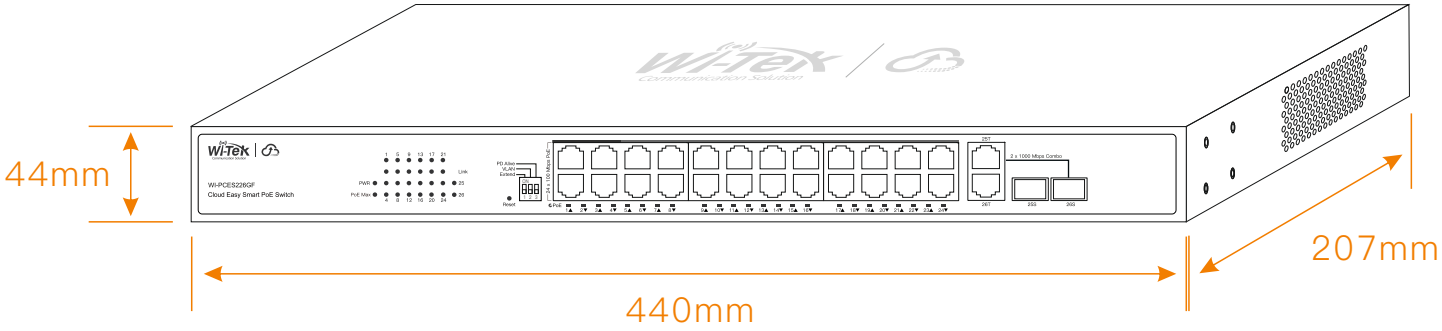

Front Panel

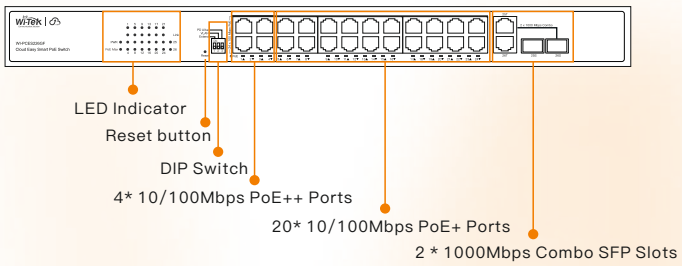

Side Panel

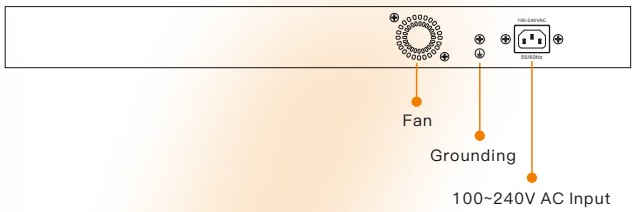

Package Contents

Welcome to order our products. After purchasing, you will receive:

WI-PCES206 | WI-PCES210G

Items	Quantity
Switch	1 pcs
Power Cord	1 pcs
Quick Installation Guide	1 pcs

WI-PCES218GF |WI-PCES226GF

Items	Quantity
Switch	1 pcs
Power Cord	1 pcs
Rack Mount kit (Hooks × 2; Mats × 4; Screws × 8)	1 pcs
Quick Installation Guide	1 pcs

Wireless-Tek Technology Limited
Address:Building 3, Units 1801-1807, 1812, Huaqiang Era Plaza, Tangwei Community, Fuhai Street, Bao'an District, Shenzhen City, Guangdong Province, China.
Website:www.wireless-tek.com
Tel:86-0755-32811290
Email:sales@wireless-tek.com
Technical Support:tech@wireless-tek.com

Technical Support
Cloud Management
Company Website

©2025 Wireless-tek Technology Limited. All Rights Reserved.
Version,V1.0, updated 2025.07.10.
The information in this document is subject to change without notice.
Every effort has been made in the preparation of this document to ensure accuracy of the contents, but all statements, information, and recommendations in this document do not constitute a warranty of any kind, express or implied.