# 100/1000Mbps Ethernet Switch

WK-S205 | WK-S208 | WK-S305 | WK-S308

## Overview

Wi-Tek 100/1000Mbps Ethernet Switches provide 5/8 Ethernet RJ45 ports, which enhance your communication quality and supply high-performance, cost-effective, stable operating conditions for your network.

With all ports support Auto-MDI/MDIX, there's no need to worry about the type of cable to use. Featuring full duplex mode can send and receive data at a rate up to 1000 Mbps, making it an ideal choice for expanding your high performance network.

## Features

### Port Performance

All ports can achieve line-speed forwarding. Each port supports automatic MDI/MDIX reversal and self-negotiation of duplex/rate. It supports 802.3x full-duplex flow control and Backpressure half-negotiation of duplex flow control.

### Plug and Play, No Configuration Required

A plug-and-play design lets administrators quickly connect the switch to devices with no hassles, no technician needed. Dynamic LED indicator lights provide simple working status prompts and fault detection.

### Fanless Design

Fanless design, to provide you with a quiet working environment, suitable for office, hotel and other application scenarios.

### Flexible Mounting, Anywhere Deployment

Supports both wall-mount and desktop installations for adaptability in any environment, saving time with flexible mounting options.

# Specifications

| Model | WK-S205 | WK-S208 | WK-S305 | WK-S308 |
|---|---|---|---|---|
| Interfaces | | | | |
| Downlink Ports | 5*10/100Mbps<br>RJ45 Ports | 8*10/100Mbps<br>RJ45 Ports | 5*10/100/1000Mbps<br>RJ45 Ports | 8*10/100/1000Mbps<br>RJ45 Ports |
| Switch Property | | | | |
| Standards and Protocols | IEEE 802.3i, IEEE 802.3u, IEEE802.3x, IEEE802.3az | | IEEE 802.3i, IEEE 802.3u, IEEE 802.3ab,<br>IEEE 802. 3x, IEEE 802. 3az | |
| Forwarding Mode | Store and Forward | | | |
| Switching Capacity | 1Gbps | 1.6Gbps | 10Gbps | 16Gbps |
| Packet Forwarding Rate | 745Kpps | 1.19Mpps | 7.44Mpps | 11.9Mpps |
| MAC Address Table | 1k | | 2k | 8k |
| Packet Buffer Memory | 448Kbit | | 3Mb | 4Mb |
| Jumbo Frame | 1536Bytes | | 15KB | |
| Input Power | DC 5V 0.55A IN | | | DC 5V 1A IN |
| Physical Characteristics | | | | |
| LED Indicators | **PWR**<br>Solid on: The power supply is normal<br>Off: The system power supply is abnormal<br>**Link indicator**<br>Solid on: A link has been established on the interface<br>Blinking: Data is being transmitted or received on the interface<br>Off: No link is established on the interface | | | |
| Fan Quantity | Fanless | | | |
| Switch Dimensions (W*D*H) | 82*50*20mm | 127*67*20mm | 82*50*20mm | 127*67*20mm |
| Package Dimensions | 108*85*61mm | 173*73*54mm | 108*85*61mm | 173*73*54mm |
| Weight | Net Weight: 0.04 kg | Net Weight: 0.09 kg | Net Weight: 0.04 kg | Net Weight: 0.09 kg |
| | Package Weight: 0.135 kg | Package Weight: 0.20 kg | Package Weight: 0.135 kg | Package Weight: 0.20 kg |
| Installation | Desktop, Wall-mount | | | |
| Environmental | | | | |
| Surge Immunity | 1kV | | | |
| Air discharge | 8kV | | | |
| Operating environment | -10℃ to 50℃(14°F to 122°F); 10%~90% RH no condensation | | | |
| Storage environment | -40℃ to 70℃(-40°F to 158°F); 5%~90% RH no condensation | | | |
| Others | | | | |
| Certification | CE, FCC, RoHS, UKCA, RCM | | | |

# Appearances and Dimensions

## WK-S205

### Dimensions (mm)

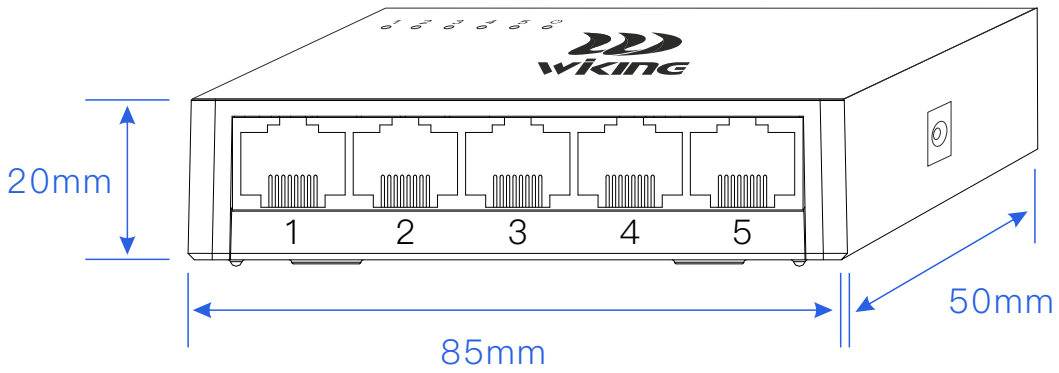


### Front Panel

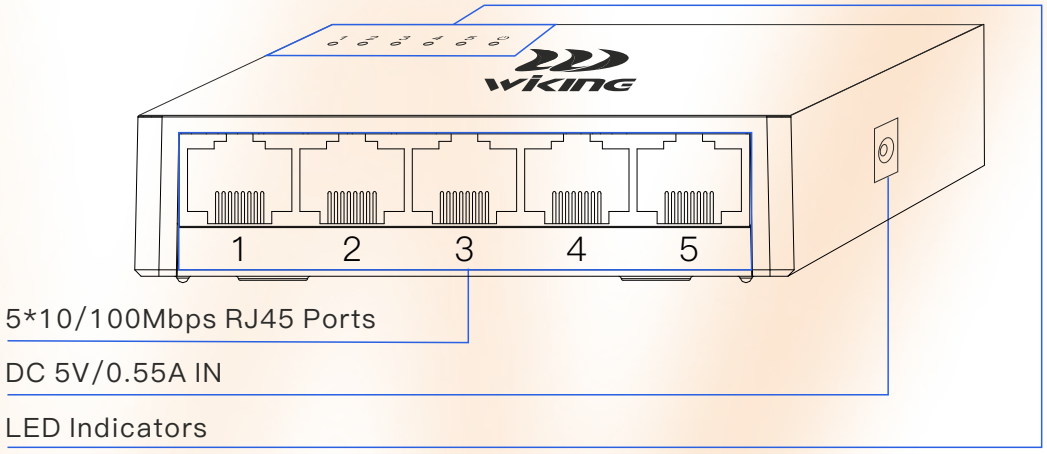

## WK-S208

### Dimensions (mm)

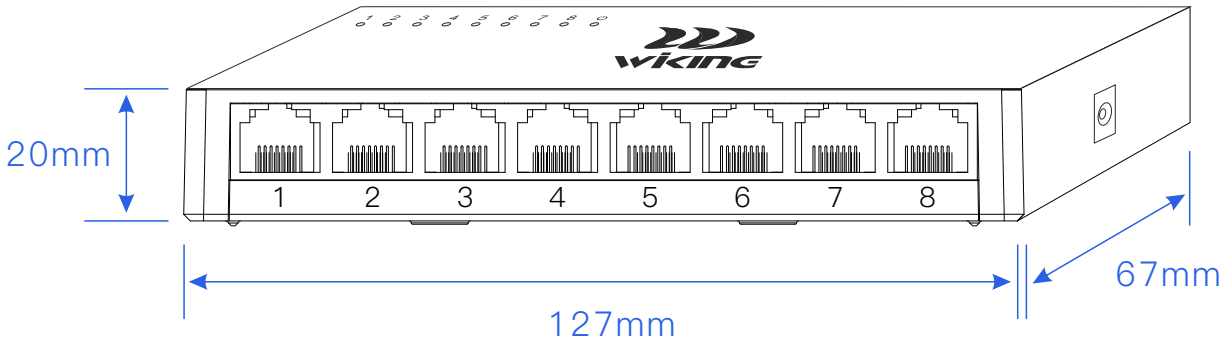


### Front Panel

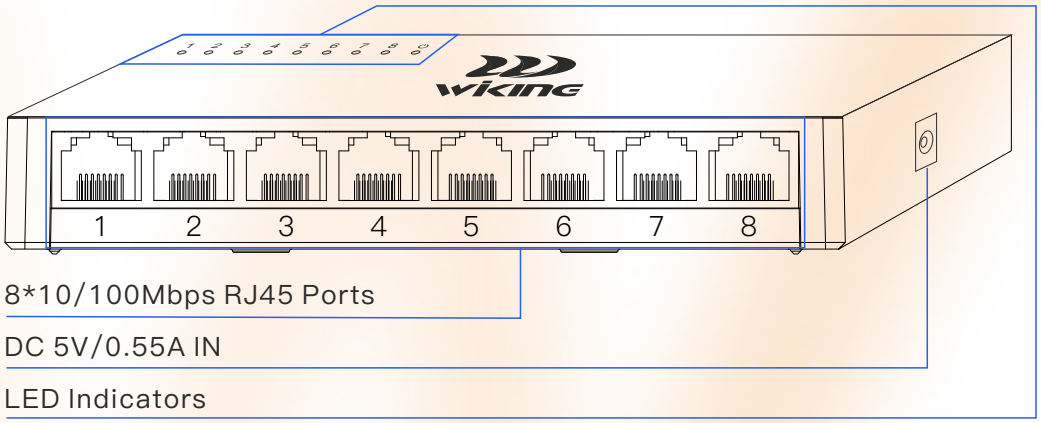

## WK-S305

### Dimensions (mm)

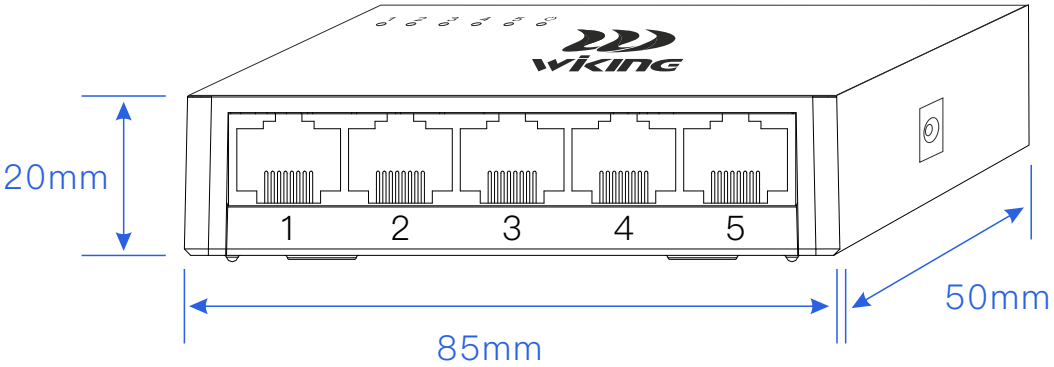


### Front Panel

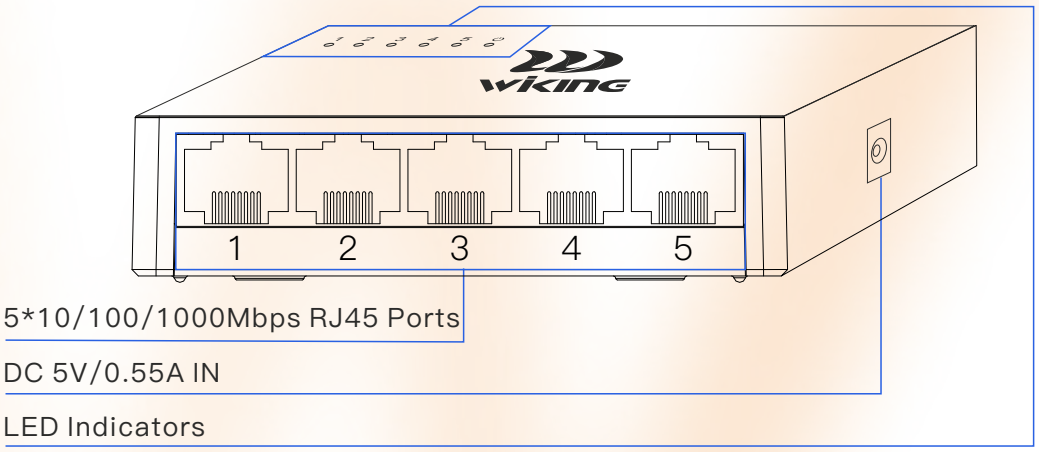

## WK-S308

### Dimensions (mm)

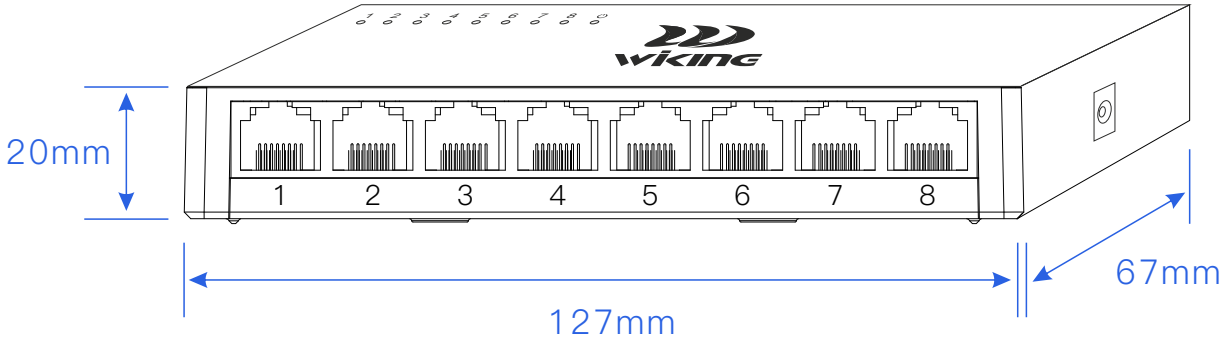


### Front Panel

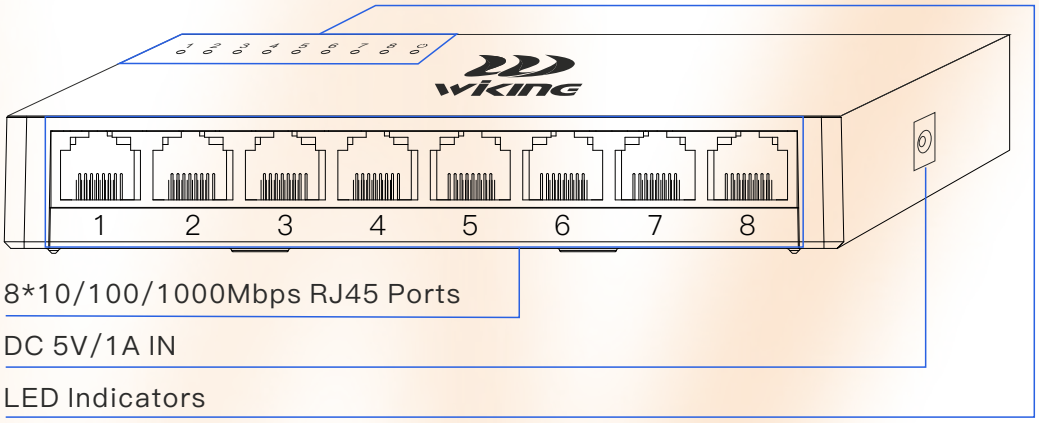

## Package Contents

Welcome to order our products. After purchasing, you will receive:

| Items | Quantity |
|---|---|
| Switch | 1 pcs |
| Power Adapter | 1 pcs |
| Quick Installation Guide | 1 pcs |

Wireless-Tek Technology Limited
Address:Building 3, Units 1801-1807, 1812, Huaqiang Era Plaza, Tangwei Community, Fuhai Street, Bao'an District, Shenzhen City, Guangdong Province, China.
Website:www.wireless-tek.com
Tel:86-0755-32811290
Email:sales@wireless-tek.com
Technical Support:tech@wireless-tek.com

Technical Support

Cloud Management

Company Website

©2025 Wireless-tek Technology Limited. All Rights Reserved.
Version,V1.0, updated 2025.09.04.
The information in this document is subject to change without notice.
Every effort has been made in the preparation of this document to ensure accuracy of the contents, but all statements, information, and recommendations in this document do not constitute a warranty of any kind, express or implied.