Datasheet

2.4GHz 300Mbps 800m Long-range Outdoor Wireless Transmitter

WK-WB08-KIT

Overview

Wireless transmitters use wireless to build a communication bridge between two or more networks. With the advantages of wireless high bandwidth, long distance, flexible point-to-point, point-to-multipoint applications, and high reliability and protection design, they can be widely deployed in CCTV applications in open areas such as highways, parks, forests, building tower cranes, or elevator shafts, eliminating the trouble of wiring.

Features

Easy to Setup

No software setup is required, and once powered on, the PTP application is connected automatically. The DIP switch and reset button can help with quick pairing.

Ultra-bandwidth

Offer wireless rate up to 300Mbps by adopting 2.4GHz solution, and 100Mbps RJ45 port, greatly improves the efficiency of data transmission.

Long-Distance Data Transmission up to 800m

Provide long-distance wireless network transmission up to 800m with a high-performance 6dBi Directional Antenna, making it an ideal choice for outdoor wireless network transmission.

PTP/PTMP

Support two networking modes, PTP (point to point) and PTMP (point to multi-point), which flexibly suiting for different outdoor network solutions.

Multiple Power Supply Modes

Support 12V passive PoE and 12V DC power supply, which can be flexibly installed according to the application scenarios.

Wi-Tek Cloud Management

Wi-Tek Cloud provides reliable performance, visual management, and remote access which is easy to operate and maintain.

Specifications

Model	WK-WB08-KIT
Hardware Version	V1.0
Hardware Features	
Interface	1*10/100Mbps WAN (PoE IN) RJ45 port 1*10/100Mbps LAN RJ45 port
Frequency Range	2.401GHz ~ 2.483GHz (Channel 1~13) *Please follow national regulations to select the appropriate frequency.
Compliant Standards	IEEE 802.11b/g/n
Spatial Streams	2x2, MU-MIMO
Maximum Wireless Rate	300Mbps@2.4GHz
Antenna Gain	Build-in 6dBi directional antenna
Half Power Beamwidth (Typ.)	Horizontal: 65°, Vertical: 65°
Transmit Power	20±2dBm max. (adjustable)
Recommended Distance	800m
LED Indicator	1*Power indicator, 1*WAN port indicator, 1*LAN port indicator, 1*Wi-Fi indicator, 4*Signal indicators
DIP Switch	H: Base station mode, supports wireless point-to-point and point-to-multipoint long-distance transmission. C: CPE mode, a receiving point for connecting a wireless base station.
RST button	Short press: Search for another wireless transmitter on a different mode (H/C status) and pair each other. Long press over 5 seconds: Restore the factory default configuration.
Power Supply	PoE: 12V@0.5A (4/5+, 7/8-) DC: 12V@0.5A

Model	WK-WB08-KIT
Power Consumption	<3W
Dimensions	180*88*59mm
Weight	0.22kg*2
Package Dimensions	260*190*100mm
Package Weight	0.71kg
Installation	Wall/Pole mounted
Material	Plastic
Reliability	
ESD Protection	Air discharge: ±8kV, Contact discharge: ±6kV
Lightning Protection	2kV
Operating Environment	-30°C to 60°C, 5%~95% (non-condensation)
Storage Environment	-40°C to 70°C, 5%~95% (non-condensation)
Ingress Protection	IP65

Software Features

Model	WK-WB08-KIT
Hardware Version	V1.0
Software Features	
System Status	System information, Wireless information, Radio status, Flow Chart, Wireless Terminal Station
Operating Mode	Base Station, CPE Repeater, WISP Mode (Switch the paring mode to control by web)
WAN Configuration	Dynamic IP, Static IP
Wireless Configuration	Wireless enable/disable, Hide SSID Wireless Security: OPEN, WPA-TKIP, WPA2-AES, WPA/WPA2-Mixed, WPA-Enterprise, WPA2-Enterprise
Radion Parameter	WMM, Weak Signal Rejection Threshold, Wireless Channel, Tx Power Control Channel Bandwidth: Auto/20/40MHz
System Tools	Wi-Fi Connection Filter, Speed Test, Ping Watchdog, Scheduled Reboot, NTP, Ping, Traceroute
Management	Local WEB management, Remote Wi-Tek Cloud management

WK-WB08-KIT

Front Panel

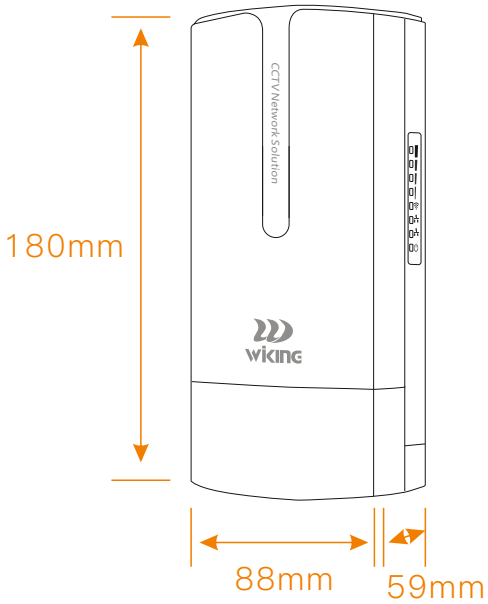

Side Pane

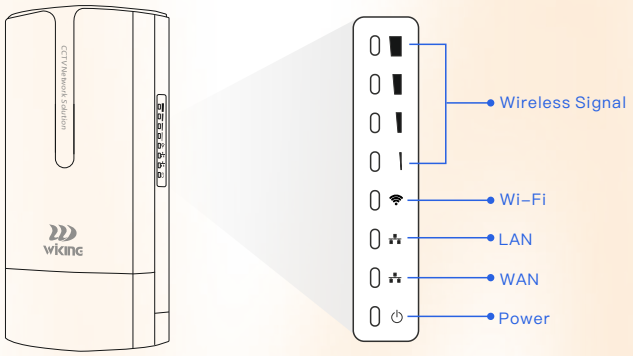

Interface Panel

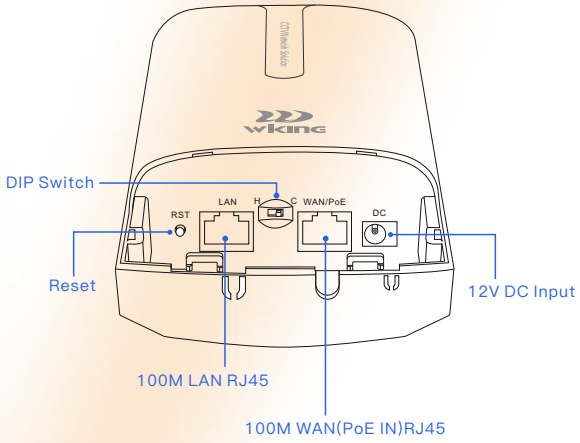

Package Contents

Welcome to order our products. After purchasing, you will receive:

Items	Quantity
Wireless Transmitter	2 pcs
12V PoE Adapter	2 pcs
Plastic Tie Accessory	2 pcs
Quick Installation Guide	1 pcs

Wireless-Tek Technology Limited
Address:Building 3, Units 1801-1807, 1812, Huaqiang Era Plaza, Tangwei Community, Fuhai Street, Bao'an District, Shenzhen City, Guangdong Province, China.
Website:www.wireless-tek.com
Tel:86-0755-32811290
Email:sales@wireless-tek.com
Technical Support:tech@wireless-tek.com

Technical Support
Cloud Management
Company Website

©2025 Wireless-tek Technology Limited. All Rights Reserved.
Version,V1.0, updated 2025.10.09.
The information in this document is subject to change without notice.
Every effort has been made in the preparation of this document to ensure accuracy of the contents, but all statements, information, and recommendations in this document do not constitute a warranty of any kind, express or implied.