Datasheet

Cloud Easy smart PoE switch

WI-PCES306G| WI-PCES310GF| WI-PCES318GF| WI-PCES326GF

Hardware Version: V2.0

Overview

Wi-Tek Cloud Easy smart PoE switch provides simple, safe, and easy-to-use local WEB and remote management methods and supports smart deployment, abnormal alarm, ONVIF automatic identification of network cameras, automatic shutdown of loop ports, etc. Users can easily use it without professional IT operation and maintenance. Wi-Tek Cloud Easy Smart PoE Switch is the best choice for CCTV and SMB network solution.

Features

Support Wi-Tek cloud management

ONVIF cameras and Wi-Tek cloud management devices can be remotely managed through Wi-Tek cloud platform/mobile APP, making CCTV network projects truly intelligent and easy to maintain. You can easily access and manage your cameras from your phone or computer anytime, anywhere.

(Note: The EWEB channel can be created only when the easy smart switch is linked with the other type of Wi-Tek cloud management device, such as cloud L2, L3 management switch, gateway, wireless AP, etc.)

Automatic Loop Prevention

By default, the switch enables port loop detection. When a loop occurs on the switch,the port which caused the loop will be closed in time to enable the switch to operate properly and maintain service continuity.

Remote Configuration

No need to go to the site to configure. Users can make some remote configurations such as port restart, PoE restart, VLAN division, and even maintenance and debugging can be done remotely anytime and anywhere.

Intelligent Operation and Maintenance

Abnormal alarm can help you locate problems quickly, making your operation and maintenance easier.

Specifications

Model	WI-PCES306G	WI-PCES310GF	WI-PCES318GF	WI-PCES326GF
Hardware Features				
Interfaces				
Downlink Ports	4*10/100/1000 BASE-T RJ45 ports	8*10/100/1000 BASE-T RJ45 ports	16*10/100/1000 BASE-T RJ45 ports	24*10/100/1000 BASE-T RJ45 ports
Uplink Ports	2*10/100/1000Mbps BASE-T RJ45 ports	2*1000Mbps SFP Slots	2*1000Mbps SFP Slots	2*1000Mbps SFP Slots
PoE				
PoE Port	Port 1-4: 802.3af/at PoE Ports	Port 1-8: 802.3af/at PoE Ports	Port 1-16: 802.3af/at PoE Ports	Port 1-24: 802.3af/at PoE Ports
PoE Standard	802.3af/at			
PoE Power Supply Type	End-span			
PoE Pin Assignment	1/2(+), 3/6(-)			
PoE Power	30W Max. for each port, 60W Max. for PoE power budget	30W Max. for each port, 120W Max. for PoE power budget	30W Max. for each port, 240W Max. for PoE power budget	30W Max. for each port, 370W Max. for PoE power budget
Performance				
Memory and Flash	Memory: 128K DDR3 Flash: 16MB			
Switch Property				
Standards and Protocols	IEEE 802.3, IEEE 802.3u, IEEE 802.3ab, IEEE 802.3x, IEEE 802.1x, IEEE 802.1q, IEEE802.1p, IEEE802.3af, IEEE802.3at	IEEE 802.3, IEEE 802.3u, IEEE 802.3ab, IEEE 802.3z, IEEE 802.3x, IEEE 802.1x, IEEE 802.1q, IEEE 802.1p, IEEE802.3af, IEEE802.3at	IEEE 802.3, IEEE 802.3u, IEEE 802.3ab, IEEE 802.3z, IEEE 802.3x, IEEE 802.1x, IEEE802.1q, IEEE802.1p, IEEE802.3af, IEEE802.3at	IEEE 802.3, IEEE 802.3u, IEEE 802.3ab, IEEE 802.3z, IEEE 802.3x, IEEE 802.1x, IEEE802.1q, IEEE 802.1p, IEEE802.3af, IEEE802.3at
Forwarding Mode	Store and Forward			
Switching Capacity	12 Gbps	20 Gbps	36 Gbps	52 Gbps
Packet Forwarding Rate	8.93 Mpps	14.88 Mpps	26.78 Mpps	38.68 Mpps

Model	WI-PCES306G	WI-PCES310GF	WI-PCES318GF	WI-PCES326GF
MAC Address Table	8k			
Packet Buffer Memory	4.1Mbit			
Jumbo Frame	9 kB			
Power Supply				
Input Power	AC 100-240V, 50/60Hz			
Power Consumption	Idle: 5W 100% Traffic Rate with PoE: 65 W	Idle: 10W 100% Traffic Rate with PoE: 130 W	Idle: 10W 100% Traffic Rate with PoE: 250 W	Idle: 12W 100% Traffic Rate with PoE: 382 W
Physical Characteristics				
LED Indicators	PWR Indicator: On: the device power on is normal Off: the device is power off or failed Link Indicator: Off: No device is connected to the corresponding port. On: Indicates the link through that port is successfully established Blinking: Indicates that the Switch is actively sending or receiving data over that port. PoE Indicator: Off: No PoE powered device (PD) connected. On: There is a PoE PD connected to be port, which supply power successfully. Blinking: Indicates the port is abnormal.	PWR Indicator: On: the device power on is normal Off: the device is power off or failed Link Indicator: Off: No device is connected to the corresponding port. On: Indicates the link through that port is successfully established Blinking: Indicates that the Switch is actively sending or receiving data over that port. PoE Indicator: Off: No PoE powered device (PD) connected. On: There is a PoE PD connected to be port, which supply power successfully. Blinking: Indicates the port is abnormal. SFP Indicator: On: port connected Off: Port disconnected. Blinking:Data transmission		
Buttons	Hold for >5 sec. to restore factory default.			
Fan Quantity	Fanless	1	2	2
Dimensions (W*D*H)	168*94*32mm	220*150*44mm	440*207*44mm	440*207*44mm
Weight	Net Weight: 0.52kg	Net Weight: 1.24kg	Net Weight: 2.4kg	Net Weight: 2.78kg
	Package Weight: 0.83kg	Package Weight: 1.84kg	Package Weight: 3.09kg	Package Weight: 3.46kg
Installation	Desktop	Rack-Mounted	Rack-Mounted	Rack-Mounted

Model		WI-PCES306G	WI-PCES310GF	WI-PCES318GF	WI-PCES326GF
Environmental					
Reliability	Surge Immunity	Common mode ±4kV Differential mode ±2kV			
	ESD Protection	Contact discharge ±6kV Air discharge ±8kV			
Operating Temperature		-10 ℃ ~ 50℃(14°F ~ 122°F)			
Storage Temperature		-40℃ ~ 70 ℃(-40°F ~ 158°F)			
Operating Humidity		10% ~ 90% RH no condensation			
Storage Humidity		5 ~ 90% RH non-condensing			
Certification					
Certification		CE, FCC, RoHS, UKCA, RCM			

Model	WI-PCES306G	WI-PCES310GF	WI-PCES318GF	WI-PCES326GF
Software Features				
Switch Settings	IP Settings			
	User Management			
	Firmware Upgrade			
	Reset			
	Reboot			
Monitoring	Port Statistics			
	Cable Diagnostics			
	Loop Guard			
	Ping Test			
Switch Settings	Port Mirroring			
	Port Isolation			
	Port Reboot			
	Jumbo Frame			
	Static MAC			
	Filter MAC			
	Search MAC			
	MAC List			
	DHCP Snooping			
QoS	Port Rate			
	Storm Control			
	Port/802.1p/DSCP priority			
VLAN Settings	Port-based VLAN			
	VLAN Range: 1-4094			
PoE Settings	PoE port disable			
	PD Alive			
	Extend PoE			
ONVIF	Automatically identify IP cameras that support ONVIF			
Wi-Tek Cloud manage	Cloud management and APP management			

WI-PCES306G

Dimensions (mm)

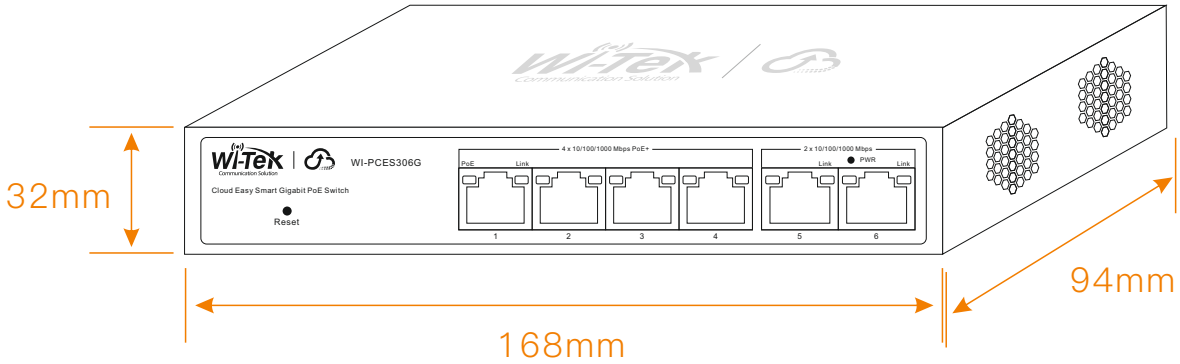

Front Panel

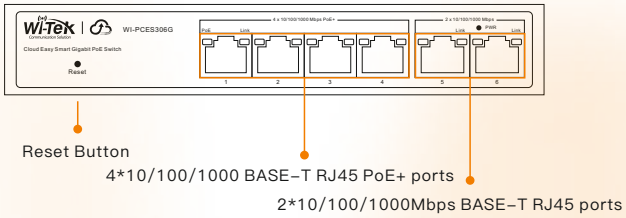

Side Panel

WI-PCES310GF

Dimensions (mm)

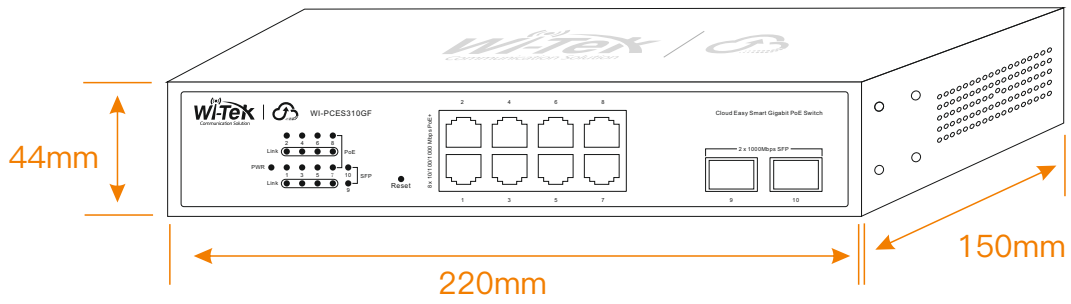

Front Panel

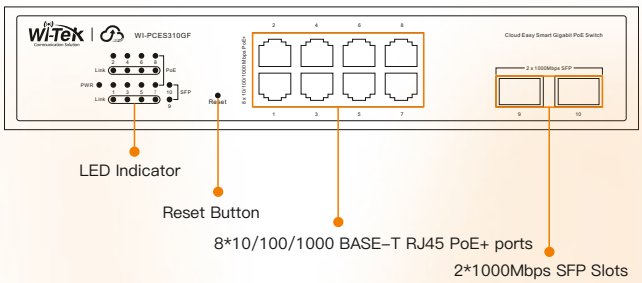

Side Panel

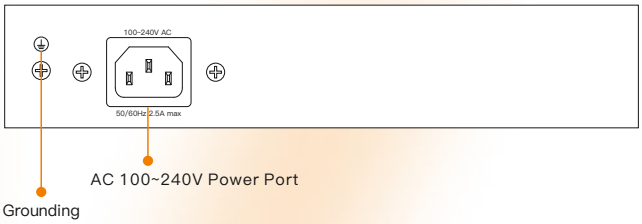

WI-PCES318GF

Dimensions (mm)

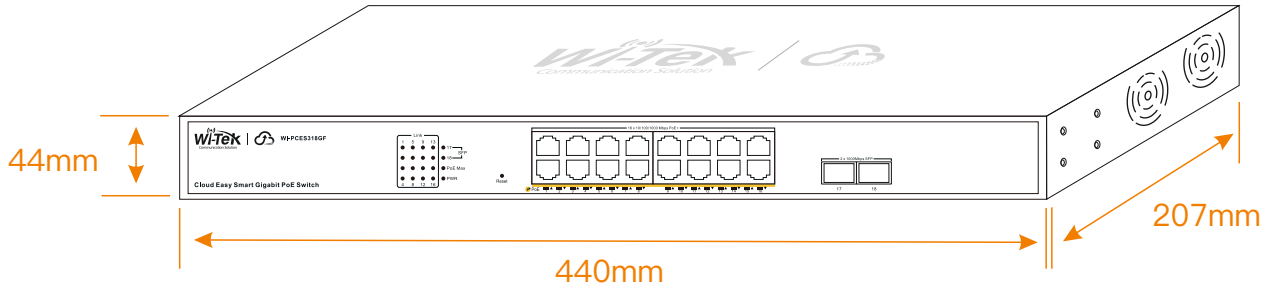

Front Panel

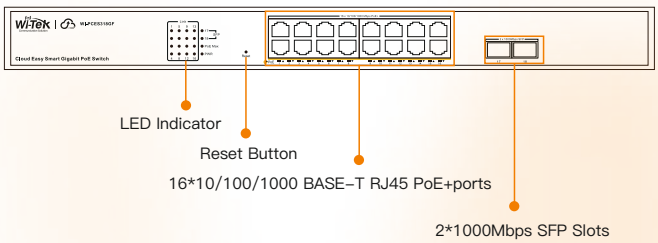

Side Panel

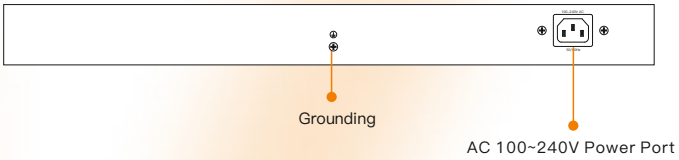

WI-PCES326GF

Dimensions (mm)

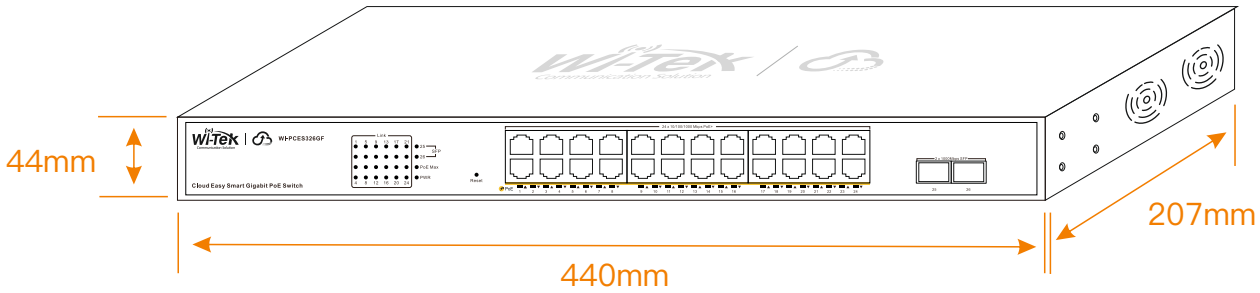

Front Panel

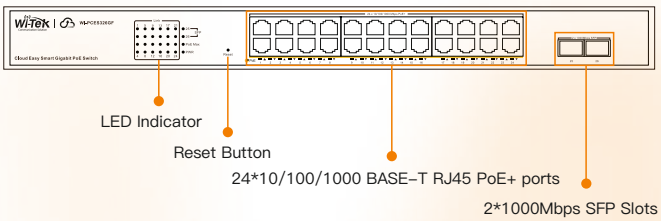

Side Panel

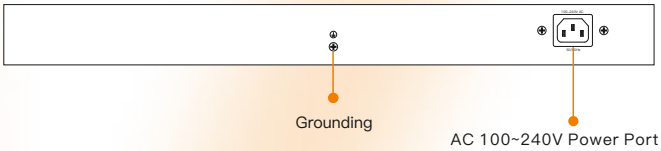

Package Contents

Welcome to order our products. After purchasing, you will receive:

WI-PCES306G

Items	Quantity
Switch	1 pcs
Quick Installation Guide	1 pcs
Power Cord	1 pcs
Mounting Accessories	Mat x 4

WI-PCES310GF/WI-PCES318GF/WI-PCES326GF

Items	Quantity
Switch	1 pcs
Quick Installation Guide	1 pcs
Power Cord	1 pcs
Mounting Accessories	Hook x 2, Mat x 4, Screw x 8

Wireless-Tek Technology Limited
Address:Building 3, Units 1801-1807, 1812, Huaqiang Era Plaza, Tangwei Community, Fuhai Street, Bao'an District, Shenzhen City, Guangdong Province, China.
Website:www.wireless-tek.com
Tel:86-0755-32811290
Email:sales@wireless-tek.com
Technical Support:tech@wireless-tek.com

Technical Support
Cloud Management
Company Website

©2025 Wireless-tek Technology Limited. All Rights Reserved.
Version,V1.0, updated 2025.03.17.
The information in this document is subject to change without notice.
Every effort has been made in the preparation of this document to ensure accuracy of the contents, but all statements, information, and recommendations in this document do not constitute a warranty of any kind, express or implied.